Braced adjustable hinges

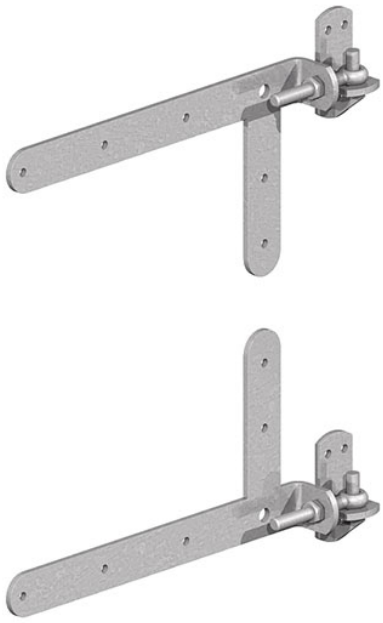

Price: £71.50

SKU: BAHG
Product Categories: Gate Fittings, Gates
Product Tags: adjustables, braced, galv, Hinges
Product Page: https://lemonfencing.co.uk/product/braced-adjustable-hinges/

Product Summary

- A pair of Braced adjustable bands and hooks on plates hinges. - 14" galvanised
No minimum order quantity for Del Area A

Not available for delivery in Del Area B
CHECK MY DELIVERY AREA

Product Description

DELIVERY / USEFUL INFORMATION
An approximate date for delivery will be given a couple of days after placing your order, either by phone or email.
There must be available parking, if there are parking constrictions, please make us aware as this may incur a charge.
We try to give either an AM or PM time slot for our deliveries, as we cannot always give a specific time of delivery.
Our trucks are tracked, so if you would like a more specific time, please phone on the day of delivery or the day before.

Product Attributes

- Dimensions: 350 × 300 × 25 mm
- Weight: 0.0000 kg