Powersheds®

Log Cabin

Instruction Manual

WARNING

UNPACKING SAFELY

Please follow these instructions to unpack your log cabin safely



- Two people minimum to unpack;
- Cut the plastic banding and remove any packing timbers;
- Carefully remove plastic covering – this can be used later to cover your components;
- Carefully unpack your components one at a time, be careful with the doors and windows as these are fragile and heavy;
- Check all the components against the checklist prior to starting installation
- **Use your construct diagram, to help you layout your components to help with the build (page 7 for more information)**

Helpful Hints:

- Your fixings will be in a plastic bag and sandwiched between the larger components in your pack
- Your component checklist can be found with the fixing kit
- **Do not** treat your components prior to installation
- The cabin pack base will be created using the tanalised battens used for the base, ensure these are put to one side and not disposed of

Do you need any help with your order?

Please call our team on 01274 036 577 or email hello@powersheds.com so we can assist!

Powersheds®

Log Cabin

Assembly Instructions



Watch the video!

We recommend watching our installation video before starting assembly of your Powersheds log cabin.

You can also watch this video on our website at:
www.powersheds.com/how-to-install-a-power-log-cabin

Contents

Page 1 – 2	Before You Start
Page 3	Timber
Page 4	EPDM Roofing
Page 5	Firm & Level Base
Page 6	Laying Out the Components
Page 7 – 9	Floor Bearers
Page 10 – 12	Logs
Page 13 – 18	Window & Door Frame
Page 19 – 21	Gable Tops + Front Overhang Logs
Page 22 – 23	Purlins
Page 24 – 26	Roof Boards
Page 27 – 30	EPDM
Page 31	Fascia Boards
Page 32	Floorboards
Page 33 – 34	Internal Finishing
Page 35 – 37	uPVC Doors
Page 38	Timber Doors
Page 39	Aluminium Doors
Page 40 – 41	Door & Window Fascias
Page 42 – 44	Maintenance
Page 45	Share your Log Cabin
Page 46	uPVC Doors and Window Guarantee
Page 47	Returns
Page 48	Contact Us

Before You Start

Most accidents are the result of negligence and carelessness, usually caused by the failure of the operator to follow simple but necessary safety precautions.

Do **not** install the garden building before carefully reading this manual and checking all components received, including the doors and windows.

Visit www.Powersheds.com to check the base size for your cabin and any other dimensions you may need.

Health & Safety

Every effort has been made during the manufacturing process to eliminate splinters on the timber.
You are strongly advised to wear gloves when working with or handling timber.




Two persons recommended

Powersheds Ltd cannot be held responsible for any damage or injury sustained due to incorrect unloading, unpacking, or assembly of any of our products.

Tools Required

(not supplied)


Drill


Spirit level


Hammer


Stanley knife


Stepladder


Saw


Rubber Mallett


Adjustable/10mm Spanner


Stiff Broom

All the fixings required to assemble your cabin will be provided with your pack.

Pre-Installation Checks

Before you begin the build, or book any installers, ensure all parts are checked off using the component checklist provided.
The checklist will be within the cabin pack or can be provided by our customer service team.
You have 30 days from delivery to report any issues, and in the very rare case of damage or anything missing, this must be reported to our customer service team at hello@powersheds.com.
uPVC doors/windows must be checked and any issues reported within 24 hours of delivery per the suppliers' terms.

If you have ordered an Insulation Kit, this will have its own component checklist, and the same process followed.
EPDM and Insulation Kits may have some parts which arrive with the cabin, and some sent directly to your property by the supplier.

EPDM will have the size written on the roll in chalk, please check this is correct prior to installation.

If you find anything to be missing, damaged, incorrect or if you're otherwise unsure, please contact our customer service team. If any issues are not reported, Powersheds cannot reimburse for any additional costs, installation costs or consequential losses incurred.

- Email us at hello@Powersheds.com
  Please provide photographs of any reported issues*
  Any replacement parts can take between 3 – 14 working days dependant on size, but we will aim to send them out as quickly as possible.
- Contact us via the telephone – 01274 036 577 (Mon-Fri 09:00 - 16:30)
- Write to us at: Powersheds Ltd
  21 Commondale Way
  Euroway Trading Estate
  Bradford
  BD4 6SF

Timber

As timber is a natural product, it is prone to changes in appearance, including some movement, warping and splitting, particularly in extreme weather conditions. There may be the occasional split, knot or similar visual imperfections in the timber.

Whilst every effort is made to hand pick timber without visible knotholes or splits there may be occasions where timber is selected in good faith that contains what appears to be a solid knot which over the course of time / during movement of the product it may occur that these small knot holes are then dislodged from the timber leaving a small knot or crack.

Unfortunately, we cannot be held responsible for this maturing of the product and can only offer our best advice as how to deal with this situation in the unlikely event that it should occur which would be to apply some wood filler to the area affected or in extreme circumstances to see if a replacement log could be provided.

There may also be shakes in the timber (which appear as cracks). Timber tries to match its environment around it. Timber can move, swell, and shrink and to do so is normal timber behaviour. This should be fully expected when buying any timber product for your garden. Often as the moisture in the air increases so will the free water absorbed by capillary action in the wood and shakes can close. None of the shakes in the timber will affect its structural integrity or inherent strength.

None of this should affect the structural integrity of the product.

Please be aware that while our Log Cabins possess exceptional structural strength, we cannot guarantee protection against damage caused by extreme storm-force winds.

EPDM Roof Covering

It is essential you are aware of proper storage of roofing materials. The following are some storage and installation recommendations for handling EPDM and adhesive:

- Read labels on all adhesive containers;
- Keep all adhesives away from ignition sources such as torches, naked flames, fire, sparks etc and DO NOT SMOKE in the vicinity of these products;
- Do not breathe vapours and maintain proper ventilation in storage areas;
- Keep the products cool and dry and out of direct sunlight prior to installation;
- Stir adhesives before and during use. If exposed to temperatures less than 10°C restore to room temperature prior to use;
- Extreme warm weather can dry out the solvents in adhesives quickly. Protect the pails by installing a piece of insulation board under the can on hot summer days and cover cans with a piece of membrane;
- Installation and positioning of large EPDM membranes may be difficult in windy conditions. Prevent any wind getting under the sheet during installation;
- The underlying substrate should be smooth and free of sharp edges, wood splinters etc. The roof surface must be dry, as moisture will cause poor membrane adhesion and blistering;
- All surfaces should be swept to remove debris, dust and other loose particles prior to installation of the EPDM;

Firm & Level Base

All our garden buildings require a firm and level base.

When thinking about where the garden building and base is going to be constructed:

- Ensure that there will be access to all sides for maintenance work and annual treatment;
- Remember not to place the base too close to any walls or fences, as there may be an overhang on the roof which may come into contact with the wall or fence;
- Refer to Powersheds.com for base dimension;
- The base size dimensions provided do not include the overhang of the interlocking logs at each corner – please be aware of these when constructing your base;
- Ensure the base is level and is built on firm ground, to prevent distortion;
- Consider when placing the base next to trees or large bushes as this could cause problems from overhanging branches, especially if these are likely to grow and come into contact with the building in the future and could cause the roofing cover to rip.

The base is slightly smaller than the external measurement of the building, i.e. The logs overhang the base at each corner.

It is recommended that the floor is at least 25mm above the surrounding ground level to avoid flooding.

Suitable bases would include a concrete base (75mm of concrete on top of 75mm of hardcore) or a paving slab base (slabs laid on top of 50mm of sharp sand).

Laying Out the Components

We recommended laying the logs for each elevation around the log cabin base, using the construct diagram to guide you. Here, you position the correct log on the correct side and so not only will this make assembly a lot quicker and easier, you can also double check that all the components are present and correct.

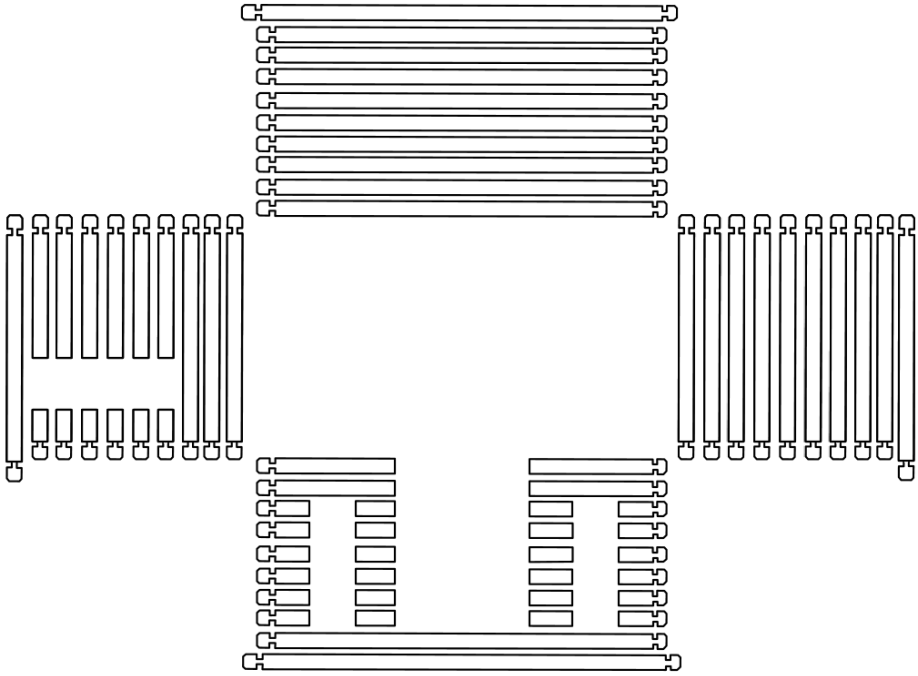

(Image is for illustrative purposes only – please consult the construct diagram for size and quantities of logs)

If you do not have a copy of your size/model specific build plan/construct diagram, please contact our customer service team prior to proceeding.

If any parts are missing, damaged or incorrect, this needs to be reported prior to installation.

**Please note Powersheds cannot accept any consequential losses should replacement parts be required. This includes storage and installation costs.*

Floor Bearers

If you have ordered an Insulation Kit, please ensure you read your full Insulation Instructions prior to starting your build. They are to be used alongside this booklet to ensure insulation is installed correctly. If you haven't received a copy of your insulation instructions, please contact us as soon as possible.

Locate the floor bearers which are the green tanalised (pressure treated) pieces of timber.

Fix the outer frame of the base together, with 100mm and 80mm screws, using the construct diagram for guidance.

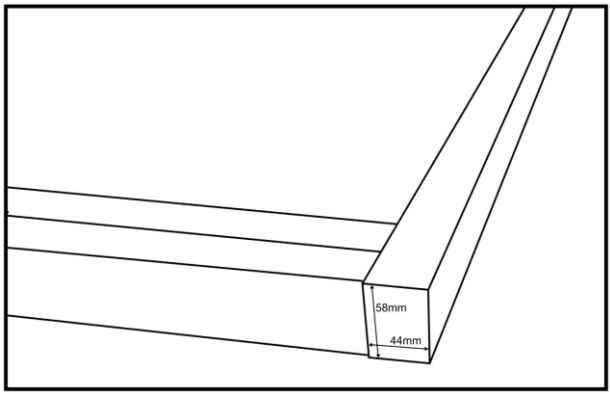

As you can see, the bearer should be resting on the narrow end i.e. the 44mm side of the bearer is touching the floor.

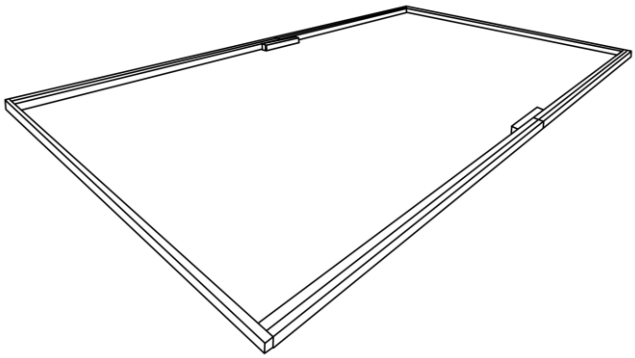

There are two bearers to join, running along the front and back of the log cabin.

You will be provided with a 'joining block' which can be used to join the longer bearers together if these are supplied in multiple pieces.

80mm screws are provided for where bearers run alongside / parallel to each other (i.e. the front and back) or where the joining blocks are used). 100mm screws are used for each end of every bearer.

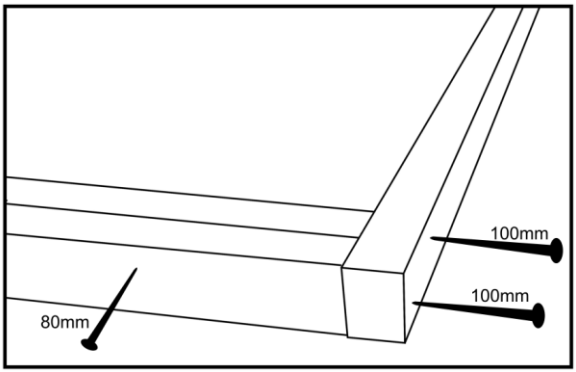

IMPORTANT!

It is now very important to make sure the floor frame is perfectly square by measuring from one corner to opposite corner both ways with a tape measure i.e. ensuring the measurements match along both diagonals. If the building is not square as you assemble it, you may find issues with the fitting of the roof, doors and windows.

Once you are satisfied the frame of the floor is square, you can now screw in the remaining floor bearers with 80mm screws. Joining blocks may be required to connect longer floor bearers together on longer log cabins. Here you screw through the joining block and into the bearer. The would be 4x 80mm screws per joining block.

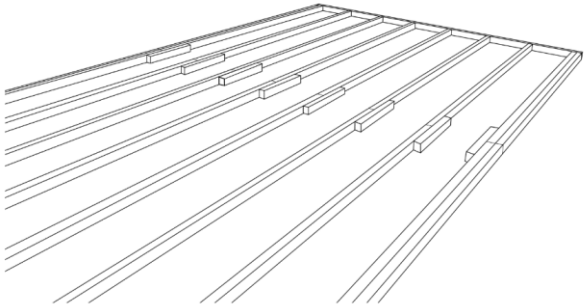

The framing on the floor should be approximately 340mm apart.

HELPFUL TIP!

You can temporarily place a 340mm piece of timber between the bearers when screwing to help provide additional accuracy.

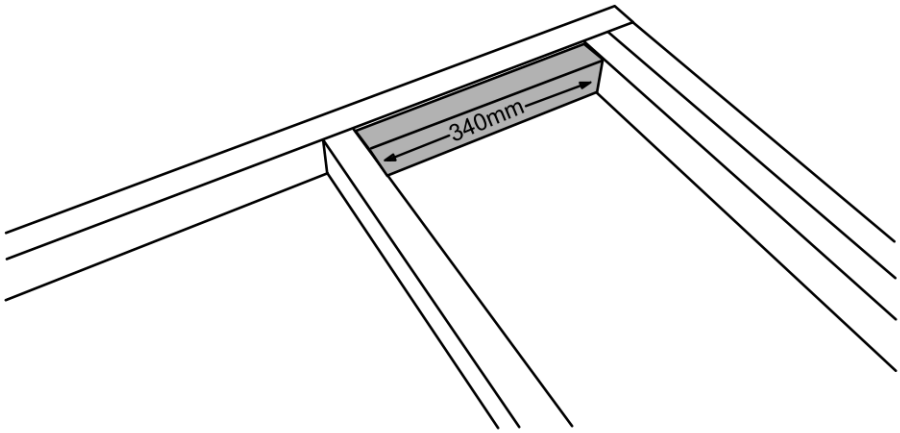

IMPORTANT!

You need to check the base is level using a spirit level on all sides and on each bearer. If it is not level, then you may need to check the base or pack up any areas under the base so that it is completely level throughout.

Logs

Continuing to follow the construct diagram, lay down the first layer of logs. The two 'half logs' need to be positioned on the gable ends.

If you have a 44mm log cabin, screw the half log to the pressure treated bearer below using 100mm screws, screwing through the tongue and groove into the bearer. Fit one screw approximately every 2ft. For a 28mm log cabin, screw down through the tongue and groove at an angle into the batten below using 35mm screws. This should be done from the inside, as the screws will be concealed by the skirting board.

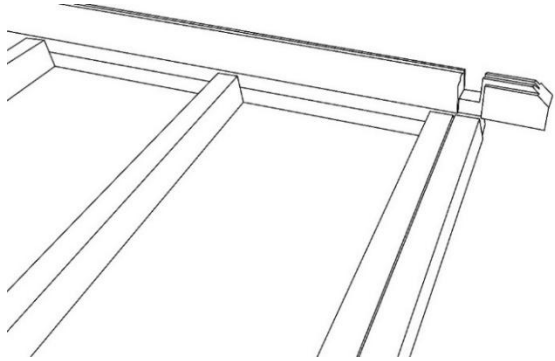

Then place the full logs appropriately in accordance with the construct diagram. There is likely to be a full log for the back wall and then smaller cut down logs for the front which will leave the opening for the doors. These logs do not need screwing to the bearer.

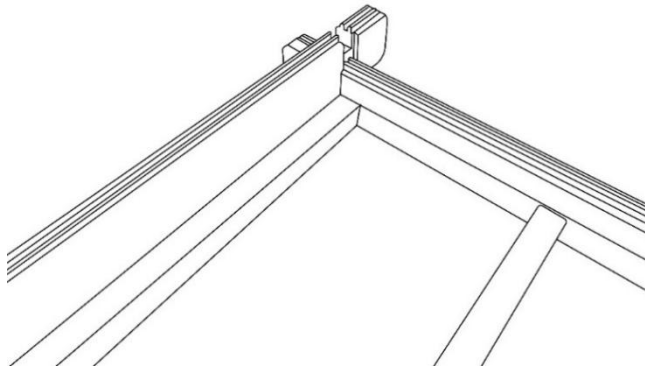

The logs will interlock at each corner as you continue to build up the layers to create your building.

IMPORTANT!

Sometimes the logs can swell due to their moisture content, causing the join to be quite tight. If this is the case, you can use a rubber mallet to knock the logs down or place a piece of scrap wood on top of the log and hit that with a hammer. Try not to hit the log on the outside of the joint as this could be susceptible to breaking. It is important to make sure the logs are fully knocked into place as you build the log cabin.

Check again that the building is square after laying down the first layer of logs. Then continue to add layers of logs to build the log cabin. It is important that you continue to refer to the construct diagram to determine the position of the logs and ensure you're using the correct logs in each position.

HELPFUL TIP!

Sometimes logs may move or twist in transit and in different weather conditions / temperatures. This is normal and is the nature of timber. If you find a twisted log, please put this as low down in the log cabin walls as possible. The weight of the building will then train the log to be straight again. If you leave twisted logs to the top, then there will be less weight to train it back into position.

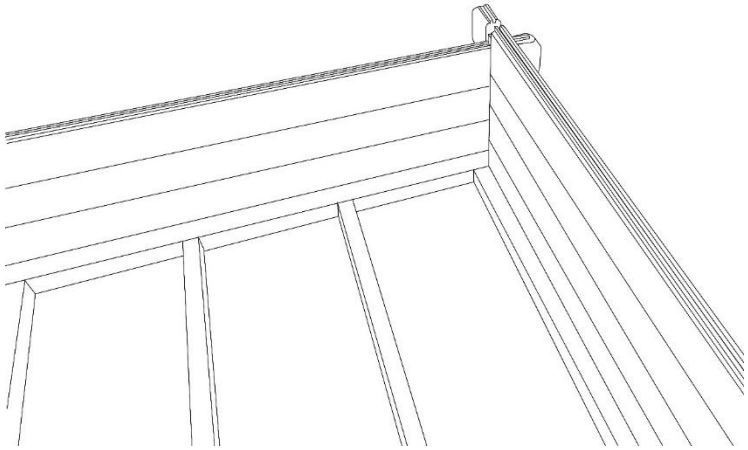

As mentioned, some logs will be shorter or cut down to leave gaps for the doors and windows, which will be positioned later in the build.

IMPORTANT!

There is some flexibility with the layout of the log cabin. For example, if there is a window on the left gable end, this window can be positioned on the right gable end instead if you want it to. If your window is positioned towards the front of the log cabin, it can be mirrored to be near the back instead (this does not apply to chalet style log cabins). If you have the doors on the front to one side (e.g. to the left of the front), this can be mirrored to have the doors on the right. For these amendments, you would simply build that 'side' with the logs in a mirrored position to the construct diagram. The other sides of the log cabin would be built up as normal.

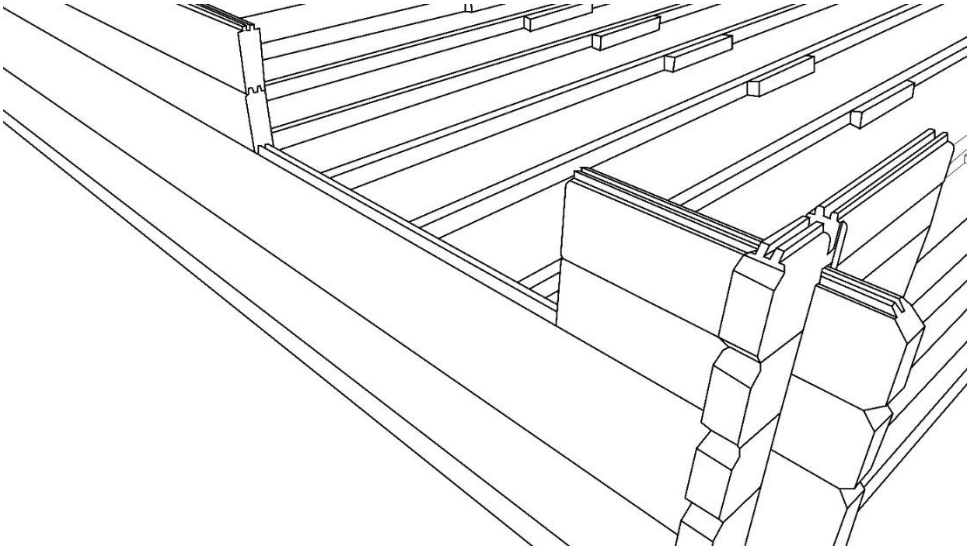

Stop adding logs once you have built up to approximately 6 logs.

At this point you will start fitting the doors and windows.

Windows & Door Frame

You can now slot in the windows and door **frame**. Carefully slide each window / door **frame** into the correct position. The grey colour should be on the outside of the log cabin whereas the white frame of the windows and doors will be on the inside. The sill of the window is on the outside. This applies to uPVC, Timber and Aluminium doors & windows.

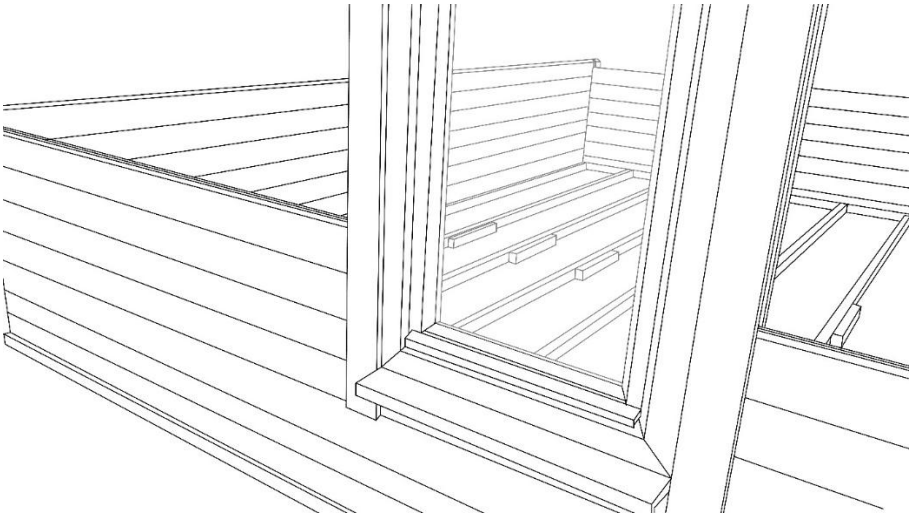

Do not fit the doors into the frame at this stage! Unless you have timber doors! Please see page (insert page here) for how to put together the timber doors.

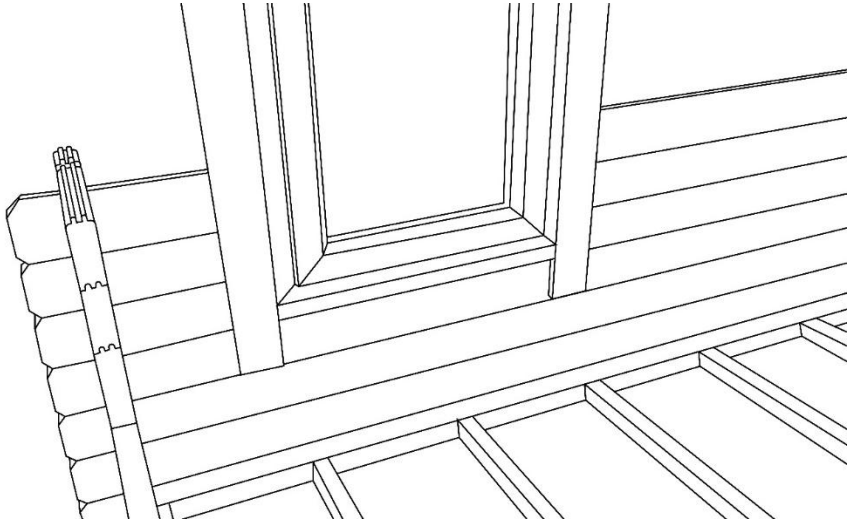

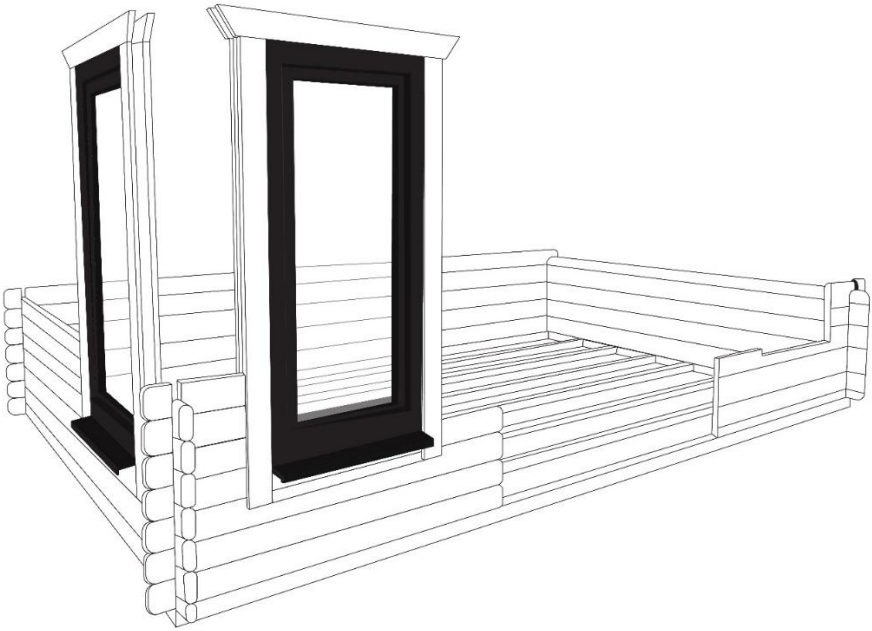

IMPORTANT!

Do **not** add the doors onto the door frame just yet – this will be done at the end of the install. Just add in the door frame and the door threshold. Please screw through the threshold into the floor bearer with 50mm screws.

Continue to build up the log cabin by adding more logs.

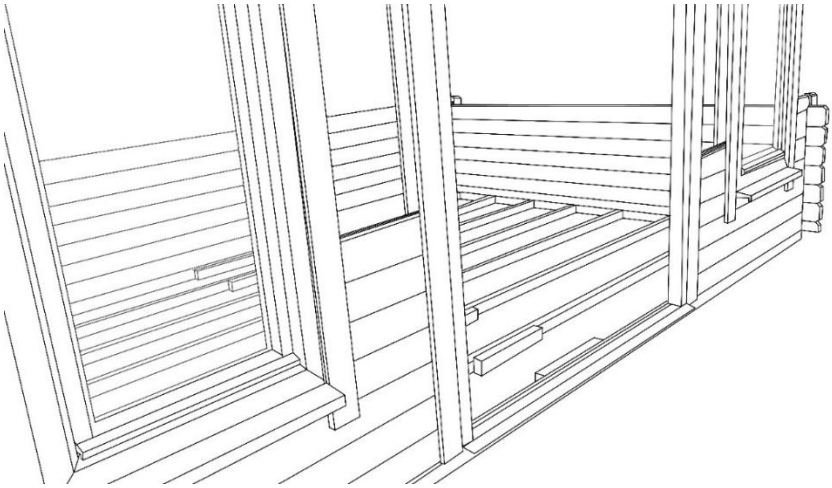

Some logs will not have a notch on and simply slide in between the doors and windows, as above.

Important!

Ensure the frame is square by measuring from corner to corner, as seen in the image below:

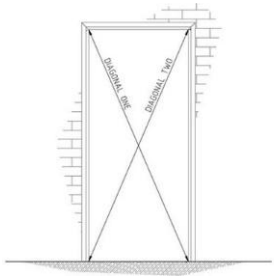

(Picture not to scale and shows a single door frame instead of a double door frame)

Do not screw the fascia to the surrounding logs at this stage.

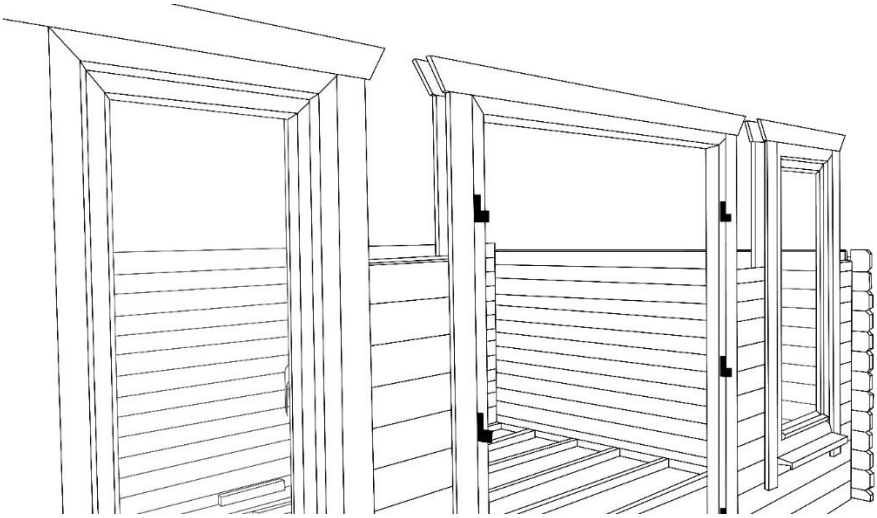

Keep adding the logs until you reach the top of the log cabin. Remember that every row of logs may need tapping down as much as possible (without breaking the logs).

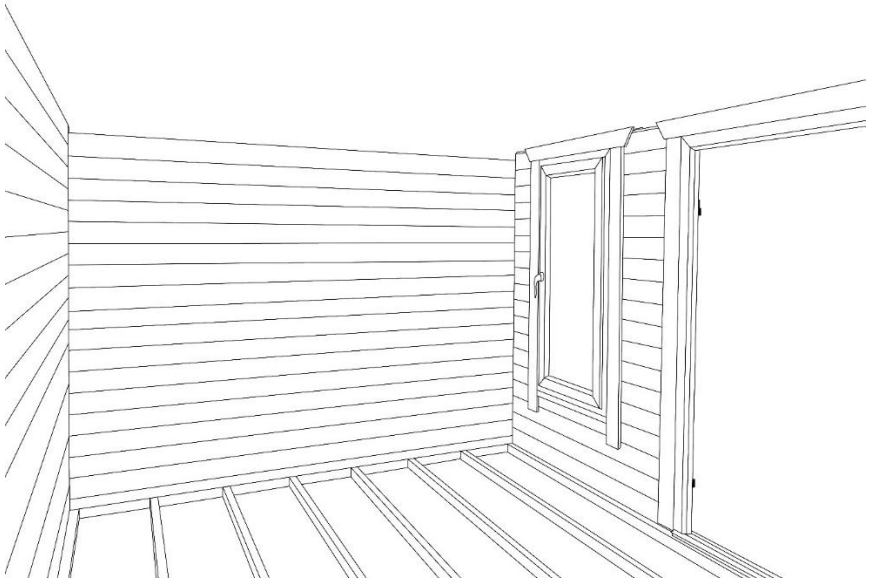

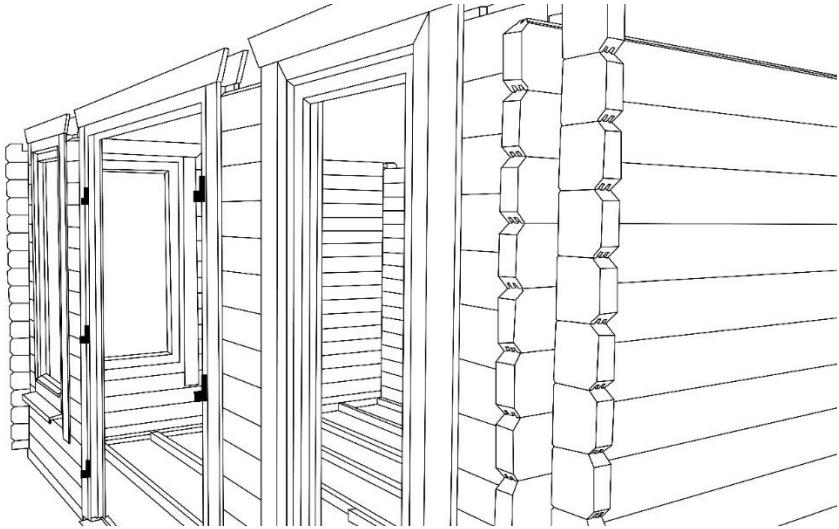

It is common for the top logs to overhang e.g. if your log cabin has a roof overhang at the front.

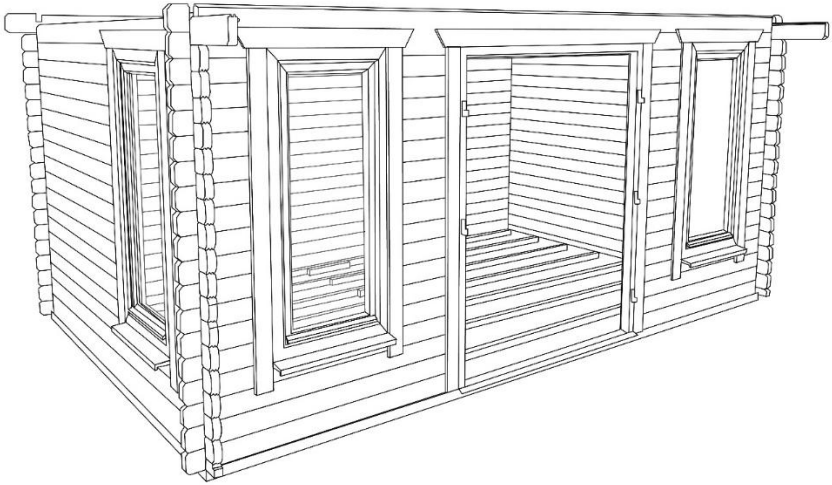

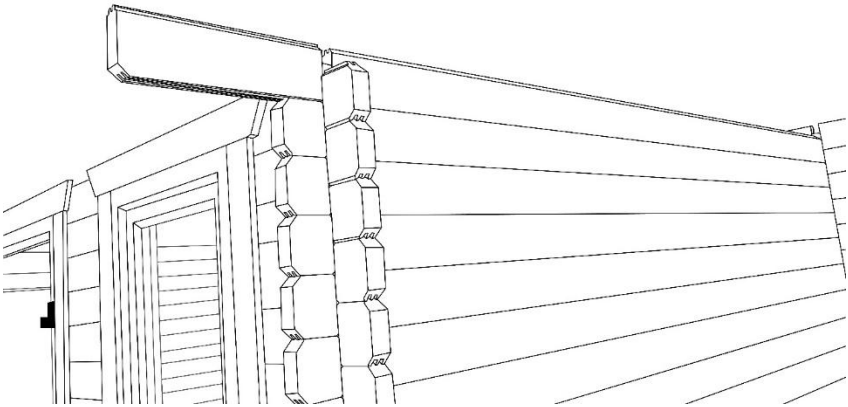

Gable Tops & Front Overhang Log

Once you have built up all sides, you can now slot in the gable tops. These generally come in two full pieces (one for each end) for transport purposes and may need unscrewing and separating before installing so that they can interlock with the other logs.

Pre-built gable top:

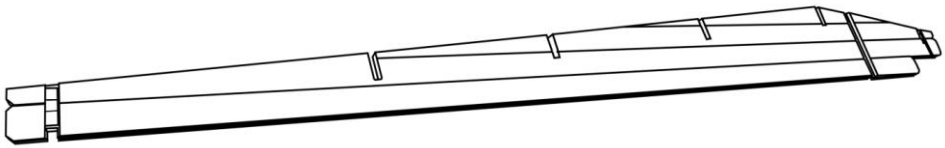

Unscrewed:

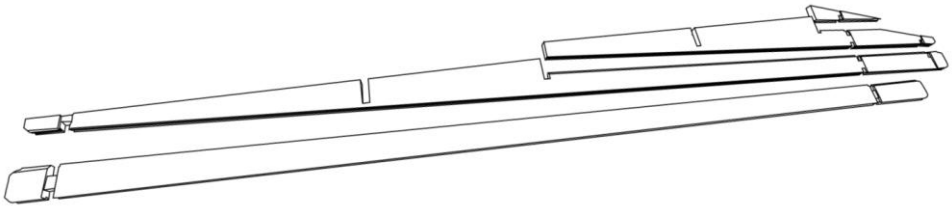

You will need to screw the gables back together and into the log below on the cabin wall once they are fitted in position. Please ensure this is done to maximise the Log Cabin's structural security.

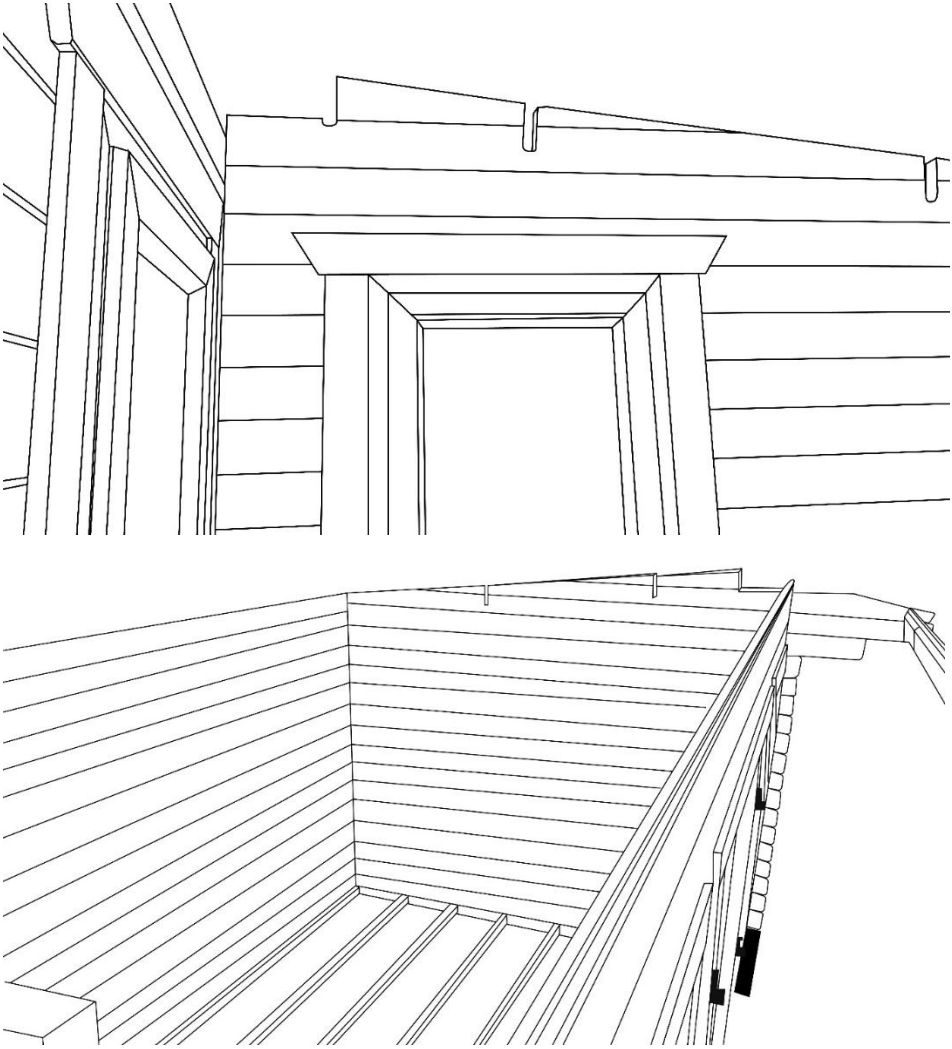

If you find that when adding the gable tops, they sit above (or higher than) the other logs where they join, this may be because the logs have not been knocked down enough. You may then need to double check each log below to ensure they have all been knocked down enough – in this instance, knock down every log using a rubber mallet so that everything fits nicely at the top of the logs.

This is also the stage where, if your base is not level, you can see logs sitting proud or above the joining logs – this is typically found in opposite corners. Here, you may have to re-check the base and pack it up so that everything sits nice and square. It only takes a few mm out on your base for this to happen.

There may also be a front log to add to the front of the roof overhang on some models.

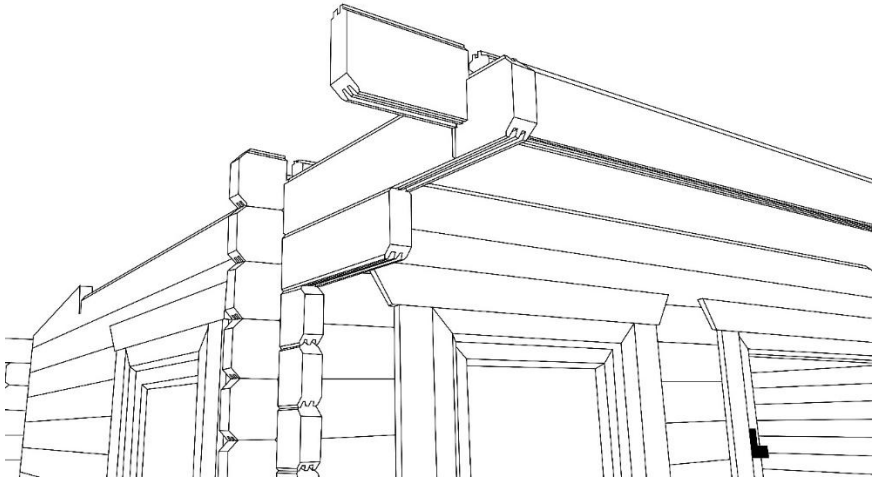

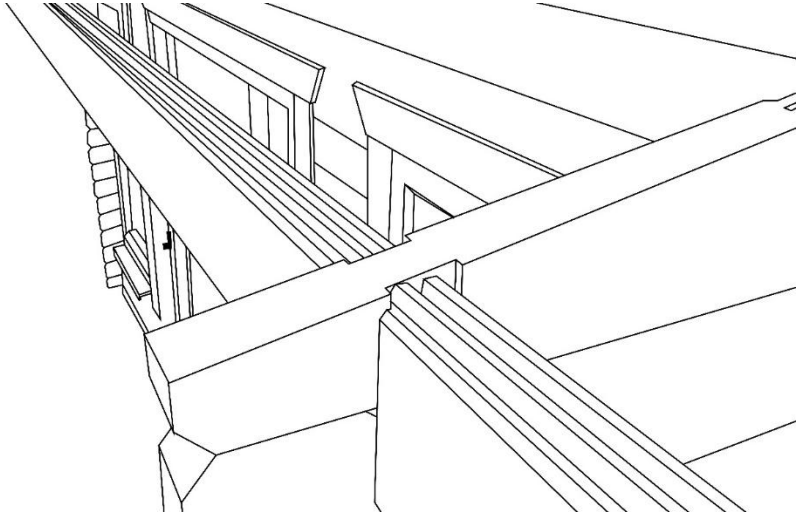

Purlins

The roof purlins are the larger 145mm deep logs, which have the corner cut at 45 degrees at each end. When adding the roof purlins, make sure they are positioned the correct way up (with the 45-degree cut facing down).

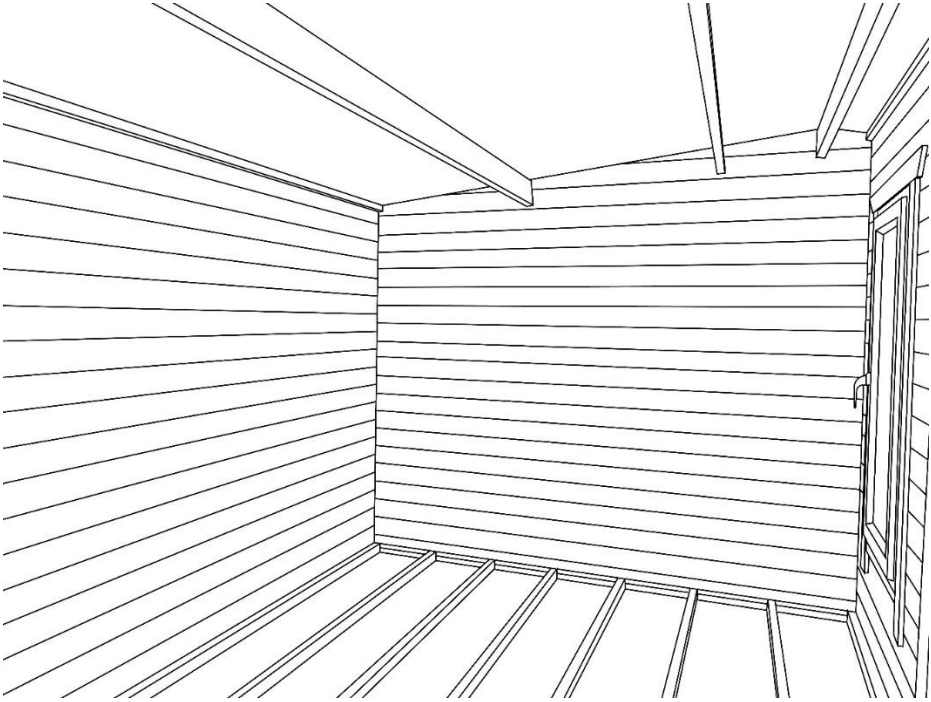

Once in place, the roof purlins should be screwed into the gable tops with 70mm screws.

Here you should ensure you are pre-drilling the holes prior to screwing to prevent any splits in the timber.

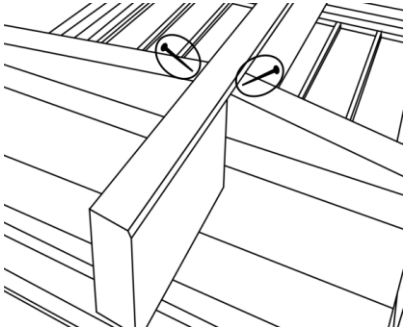

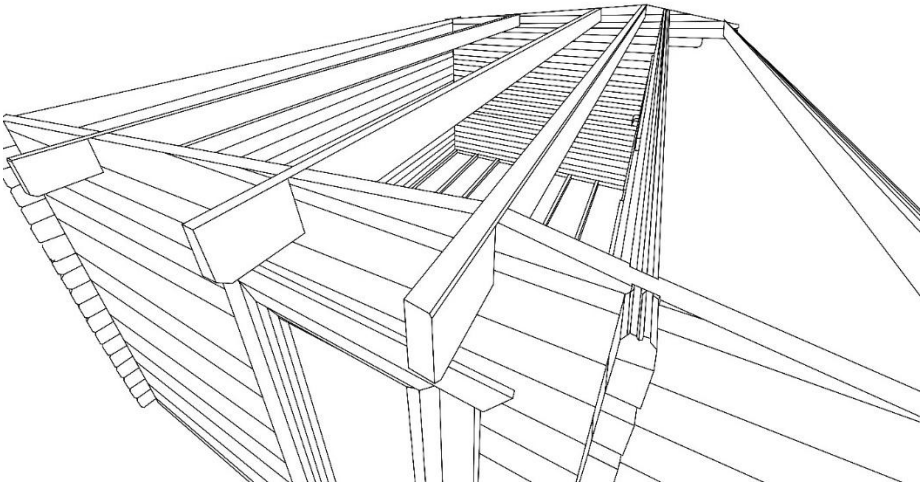

Roof Boards

Prior to adding the roof boards, you need to ensure all four walls are vertical i.e. they are 90 degrees to the floor on each side and level horizontally. Use a spirit level to check this. If the walls are not level, they may need pushing over so that they are completely vertical.

Once you are satisfied the building is square and walls are straight, you can then begin to screw the roof boards to the roof purlins.

Start with a full board at one end and screw each board into the roof purlins and top logs on the front, rear & gables of the Log Cabin, using two screws per roof board, per purlin/log. 35mm screws are required for this. Using two screws per board per purlin/log gives it maximum strength and minimises the chance the roof can twist.

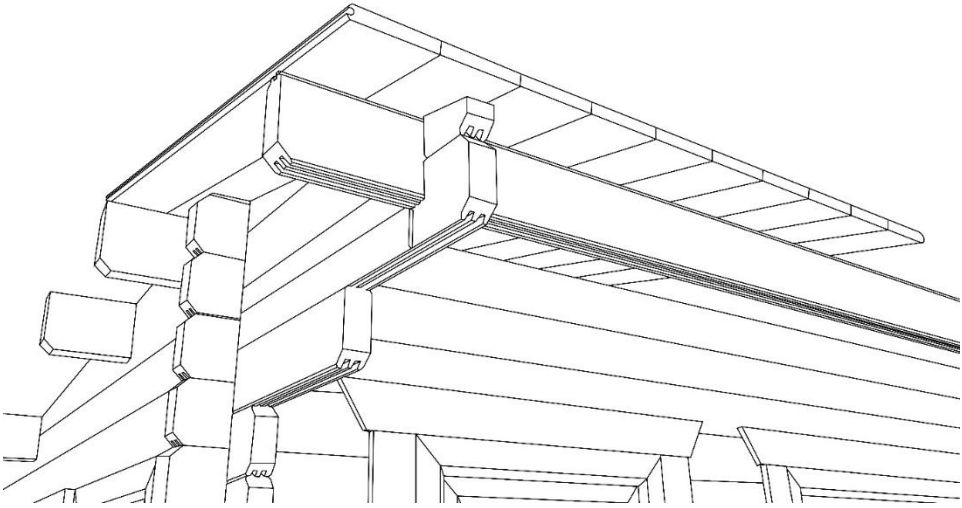

It is likely the last roof board will need cutting down to size so that it fits to the end of the roof purlin.

Continue doing this until the full roof has been boarded. Apex roofs will of course have two sets of roof boards – one set for the front, and one for the back.

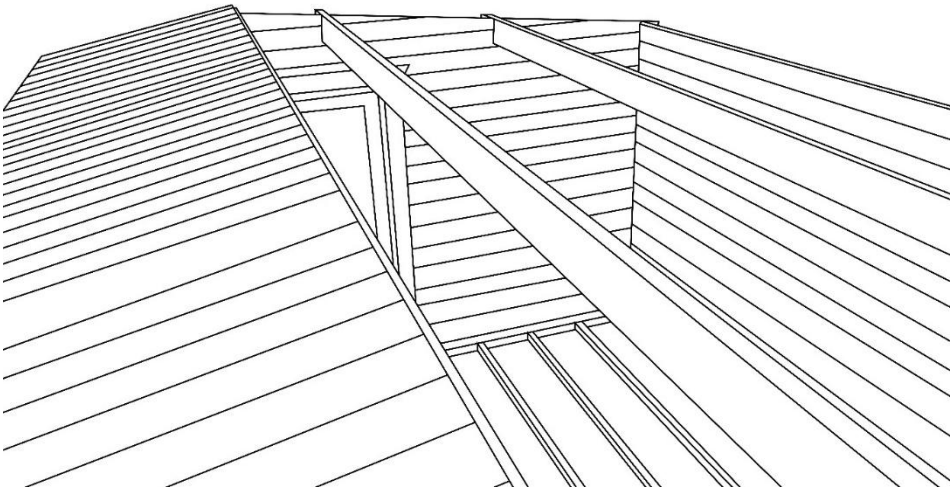

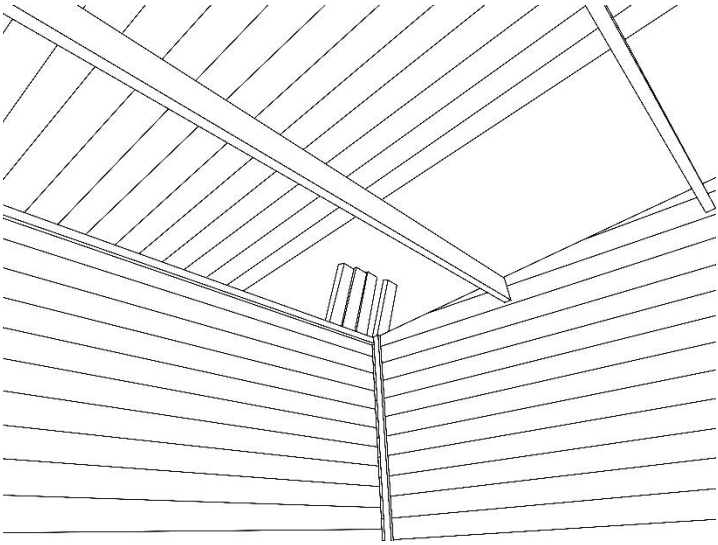

Once the roof boards have been secured, there are then framing battens to attach to the underside of the roof boards at the front and the back externally. These battens may come in more than one section. Screw these to the roof boards with 35mm screws (screwing down through the roof board into the roof battens). Add a screw approximately every 450mm.

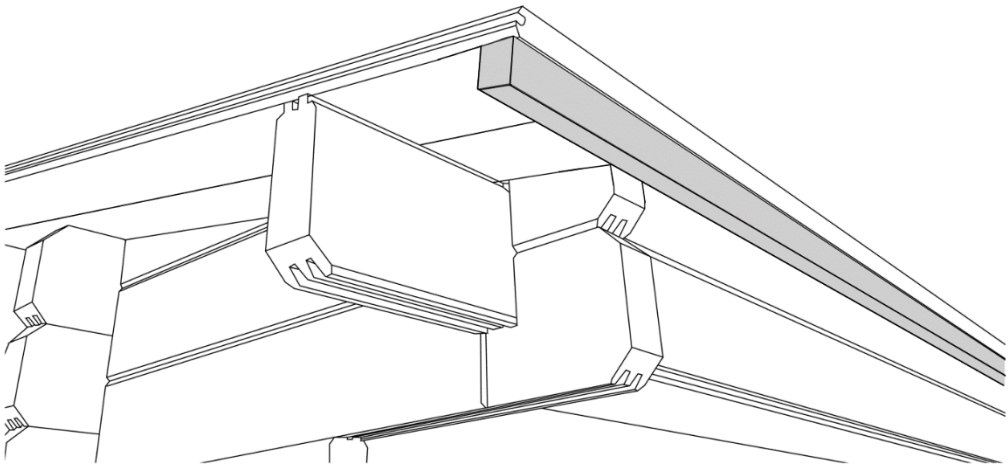

Although this piece of framing can be attached to the underside of the roof overhang either way round, if you attach it on the end of the framing so that it hangs down by 44mm, the next part of attaching the EPDM guttering is easier.

If you have ordered an Insulation Kit, please refer to the separate instructions now. If you haven't received a copy of your insulation instructions, please contact us as soon as possible.

EPDM

EPDM can occasionally be delivered directly from the supplier. There will be a package containing the EPDM and a separate package with some adhesive. The log cabin will come with a roller to apply the adhesive and a number of gutter edge strips.

Please ensure you check the size written on chalk on the roll of EPDM, and if you have any questions, please contact our customer service team.

*Please note, only PVA adhesive is supplied with our log cabins. Bonding adhesive is not required due to the use of fascia boards/trim in most temperatures. If you are installing your cabin below 10°C, you may need to purchase a solvent-based adhesive.

Health and Safety – Use safety goggles when installing EPDM and applying adhesive.



Gutter edge backplate

Before the EPDM has been put on, it is time to add the gutter edge strips to parts of the roof where rainwater could run off. On an apex log cabin, the gutter edge strip is to go on both the front and the back. On a pent log cabin, the gutter edge strip is for the back low side only (as the front high side will be covered by a fascia board instead).

When fitting the gutter edge, it is advisable to install the gutter edge back plate before the membrane is added and adhered to the roof.

Make sure the top of the backplate is flush with the roof surface and then secured to the framing on the underside of the roof with 25mm screws, adding a screw every 2ft.

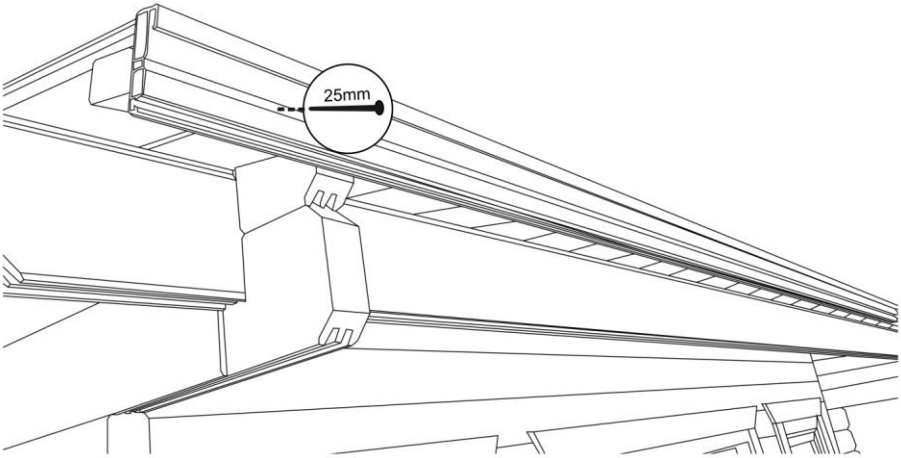

Place the screws through the backplate and into the timber behind, using one screw approximately every 2ft.

The membrane

Place the full membrane over the roof, ensuring you have full coverage.
Allow to relax for 30 minutes.

IMPORTANT!

Warning - this full membrane will be very heavy.
Take extra appropriate precaution and safety measures when adding this to the roof.
Use more than one person to help get it on the roof.

Fold half the membrane back on itself and apply the water based adhesive supplied to the roof deck using the roller. Carefully place the membrane back down and then repeat the process on the other half. A pair of protective latex gloves should be used when applying the adhesive.

Broom over the surface of membrane to ease out any creases or bubbles.

Gutter edge

Once the membrane is applied to the roof, trim the edge of the membrane making sure that 50mm of membrane overhangs the edge of the roof (falling over the gutter edge back plate). The top edge of the drip plate is then pushed under the top lip of the backplate, with the membrane being trapped between the two plates.

It is worth noting that it is very tight when trapping the membrane in to ensure the right fit. Here, the drip plate will need firmly trapping into place until it clips in securely. The use of a short batten with a hammer or rubber mallet will ensure that the drip plate will not be damaged during fitting. Do not strike the drip plate directly.

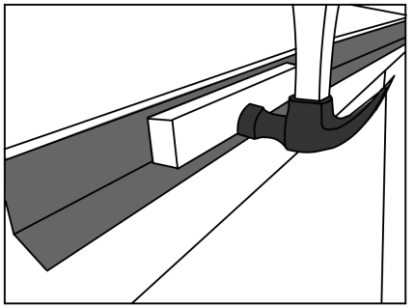

For more information, take a look at this helpful video:

This video is for sheds, but the same applies to Log Cabins. No bonding adhesive is required for the edges of these buildings.

Important Tip!

You will need to perform your own working from height assessment to ensure you are working safely when installing the roof. We advise having a minimum of two people.

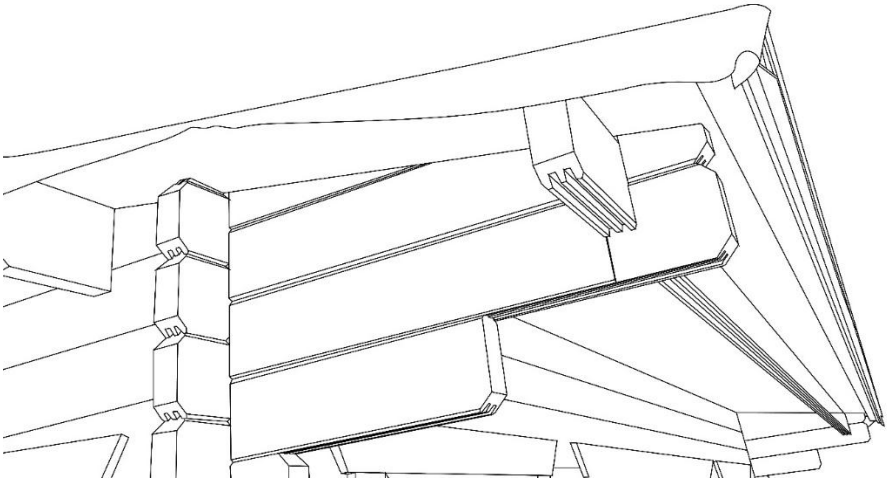

Fascia Boards

Attach the fascia boards to the end of the roof with 35mm screws. Fascia boards may come in two parts.

With offset apex and chalet log cabins, you will only receive fascia boards for each gable end (not the eaves).
There is then a finial to go over the join of the fascia boards.

With pent log cabins, you will receive fascia boards for each gable end and ~~then also~~ the front (high side) of the log cabin. There is no fascia board for the back (low side) to encourage efficient water run-off. There is no finial for a pent log cabin.

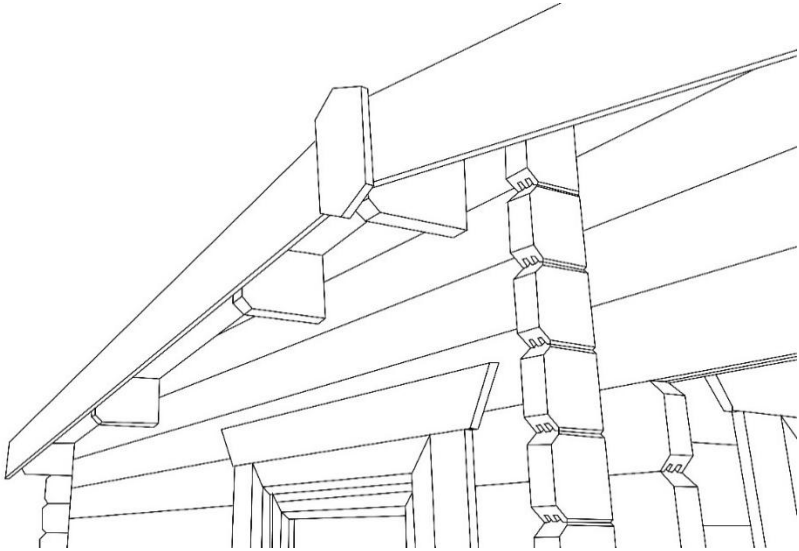

Floorboards

You can now add in the floorboards which are secured with 35mm screws to the floor bearers. Start at one end – you should find there will be a very small gap around the floorboards between the edge of the floorboards and the face of the wall.

Note - The gaps around the edge of the floorboard will be covered by the skirting and allows the floorboards to expand and contract in different temperatures.

Use two screws per board per floor bearer. You will need to cut the boards down to fit around the bottom of the door frame. These boards can go tight up to the door frame with little or no gap as skirting will not be used where the bottom of the doors are positioned.

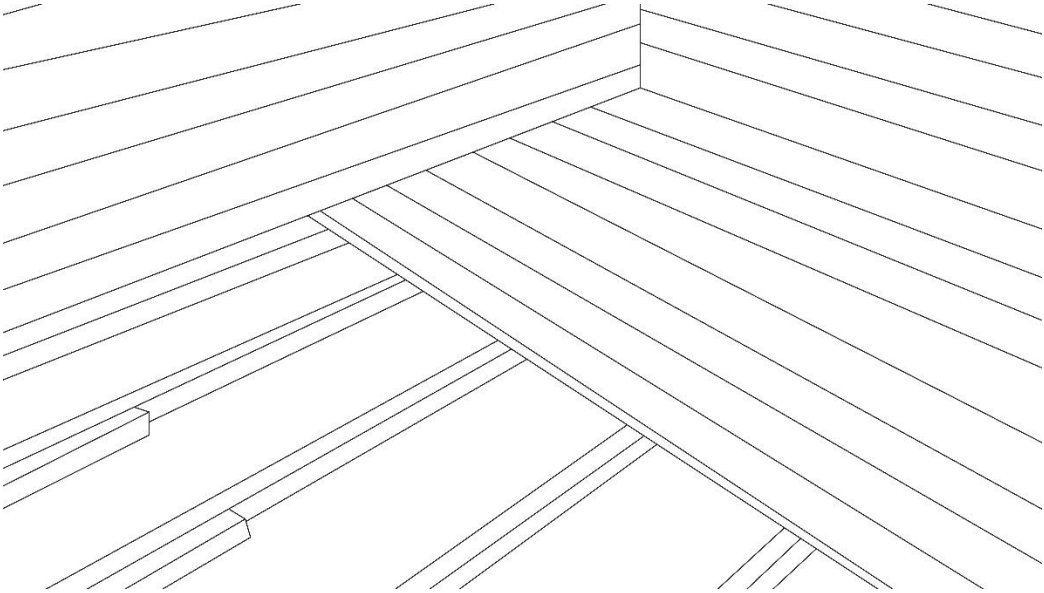

Internal Finishing

Add in the internal skirting on the inside of the log cabin. This may need cutting down to fit, particularly either side of the doors. Attach the skirting with 35mm screws, approximately 1x screw every 2ft.

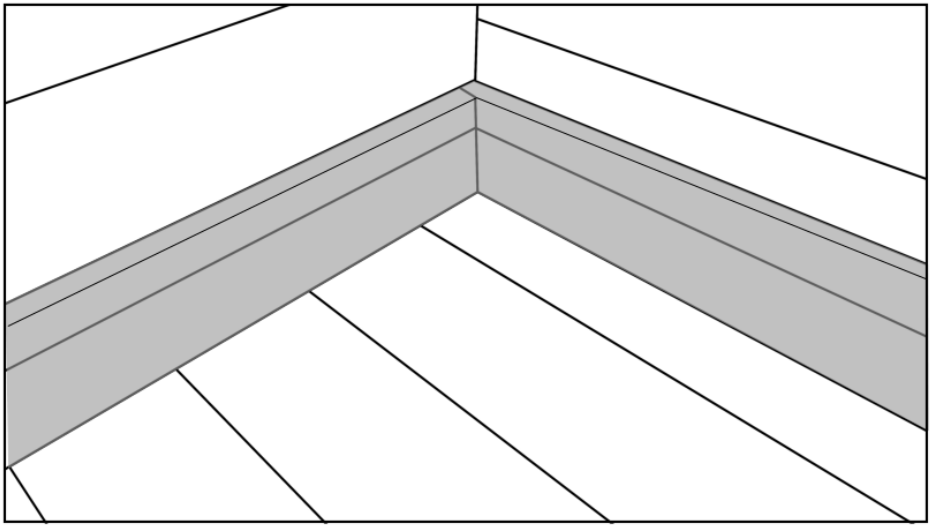

Then add another batten, horizontally, to the top of the logs under the roof board (internally) – at the front and the back (so not at each gable end). Again, the batten may come in more than one section. Attach with 50mm screws, approx. one every three feet.

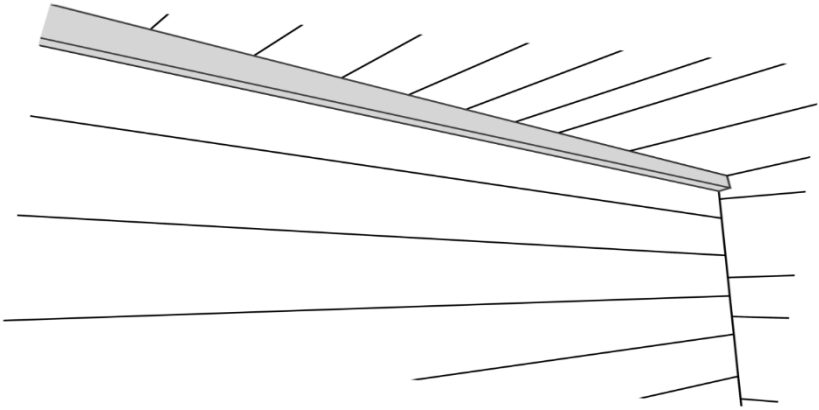

Storm braces are used on log cabins so that the gables at the top of the logs are tied into the logs below – these hold the cabin together, protect from damage and help prevent the roof from being lifted during high winds. Although the roof should not come off anyway, these are there for an extra precaution. They have been designed in mind to allow for natural expansion and contraction of the logs.

Each storm brace has a pre-drilled hole at the top and then a longer slot at the bottom. There are four storm braces, one for each corner of the log cabin. The storm braces are fitted to each gable, towards the corner, with the 45mm coach bolts provided. Add the bolt to the centre of the slot at the bottom of each storm brace to allow for this natural movement and add a bolt through the predrilled hole at the top. It is important that the storm brace is the correct way around as if it was s fitted with the slot at the top, it could push through the roof.

Make sure the position of the storm brace is as high up as possible so that the gable top is tied into the logs below. Use a hammer to tap them in and then an adjustable (or 10mm) spanner to tighten them.

For Pent roof Log Cabins, consider positioning the storm brace slightly higher on the high side of the gable wall to ensure maximum structural strength.

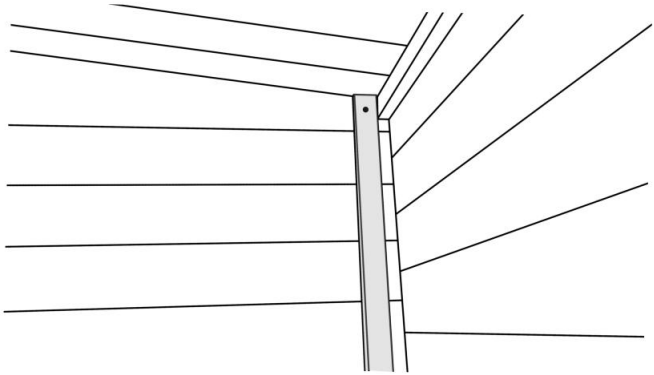

Please note that the storm braces cannot prevent damage to a log cabin in very strong winds / storms.

uPVC Doors

These feature four grey hinges which are equally spaced on the door.

Before installing your doors, ensure you have checked again that the door frame is square from corner to corner. If it is not square, you could face alignment issues with your uPVC doors when fitted. You will also want to check the cabin walls are plumb.

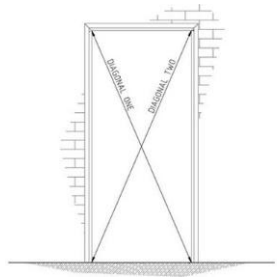

(Picture not to scale and shows a single door frame instead of a double door frame)

Why not watch our quick video guide before starting?

Installing the slave door

Your doors will arrive with the sashes removed. These will need to be re-fitted on to the frame once in position.

Start by removing the hinge caps from the top and bottom of the hinge on the door frame.

Use an allen key or similar to push the silver part of the hinge up through the bottom hinge cap and out of the top one.

Slide the hinge on the door sash into the gap where the silver part was on the door frame, and once in place slide the silver part back into position through the top of the hinge.

You can then replace the hinge caps.

Adjusting the hinges

Your doors may need adjusting after installation, and at other times during the lifetime of the cabin.

To access the hinge for adjustments, you will need to loosen the two screws on the 'rear' of the hinge and remove the hinge cover.

Important!

It is common practice that you may need to adjust your uPVC doors over time, as they can move, helped on by gravity, heat, and humidity. **Please note:** When adjusting your doors, ensure you're not putting all the weight on one hinge.

There is a photo guide below on how to adjust your doors.

Lateral Adjustments

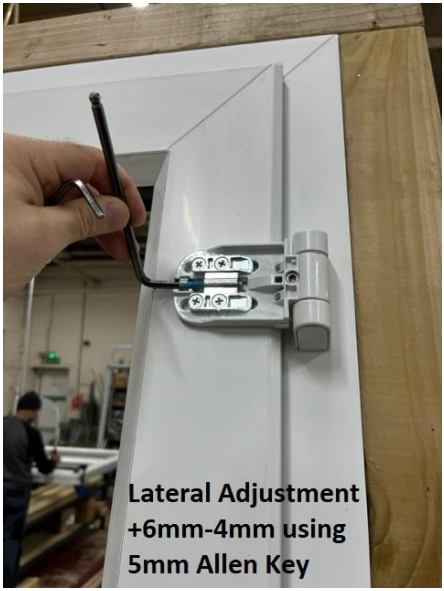

Compression Adjustments



Height Adjustments





If you need to remove the door sash for any reason, you can do so following the below instructions:

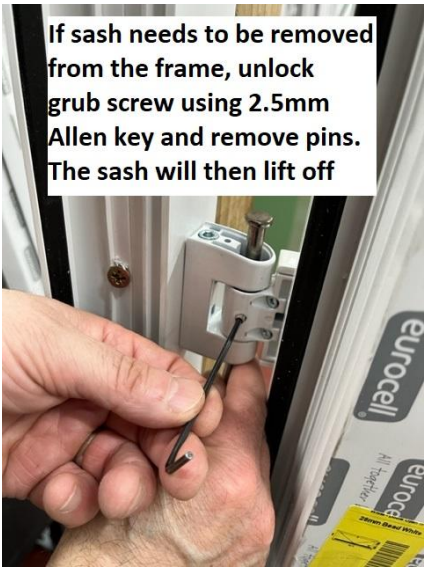



Timber Doors

If your cabin is supplied with timber doors and windows, you will need to refer to the below instructions and use the QR code provided to view the assembly video:

Helpful tip!

The doors, once assembled, can be quite heavy. If you're struggling to lift these, you can unscrew the hinges and remove the door sashes. You can then lift the assembled frame into position and re-fit the door sashes.

1. Place the Left-Hand and Right-Hand door sections on a flat surface

2. Lay the door head and door sill in position, ready to screw together

3. Use a hammer to gently tap the head and sill onto the door log tenons.
**This is easier if you have two people and if the doors are in an 'open' position*

4. Use (2x) 70mm screws at each corner to secure the door head to the doors

5. Use (3x) 70mm screws at each corner to secure the door sill to the doors

6. 'Close' the doors and get the door fascia in position (this will have pre-drilled holes). Make sure the branding plate is facing the outside of the doors, and use (4x) 35mm screws to secure in position

7. Lift the assembled doors so they are upright and secure the door furniture (i.e. door handles.
**You may wish to secure the bolts to prevent the doors from opening when lifting*



Aluminium Doors

If your cabin is supplied with aluminium doors and windows, you will need to refer to the below instructions:

Before installing your doors, ensure you have checked again that the door frame is square from corner to corner. If it is not square, you could face alignment issues with your Aluminium doors when fitted. You will also want to check the cabin walls are plumb.

1. The left door is placed on the **back track** as viewed from the outside. The handle should be on the left, and the number "1" should be visible on the outside. Insert the door from the centre of the frame, using a third person to lift the centre of the frame, to allow the door to be slotted in. Once the door is in place, slide door one to the left and lock it immediately.
2. [For 3-track door versions] The middle door should be slotted into the **middle track** following the same method as above. Once in, slide it slightly to the left.
3. The final door should have the handle on the right and will be installed the same way as the first door, only on the **front track** and sliding the door to the right**.**

To test the doors, slide each door left and right. Doors can open from either end. If the doors don't lock properly, it may indicate the base is out of square.

Once the above has been checked, insert the drainage covers. Push the supplied drainage covers into the pre-drilled holes at the bottom of the doors. These will be clearly visible.



Door & Window Fascias

For each window, there needs to be the low fascia board adding on and screwing into place.
This goes below the sill and gives each window a nicer finish. Attach these with 35mm screws, two at each end.

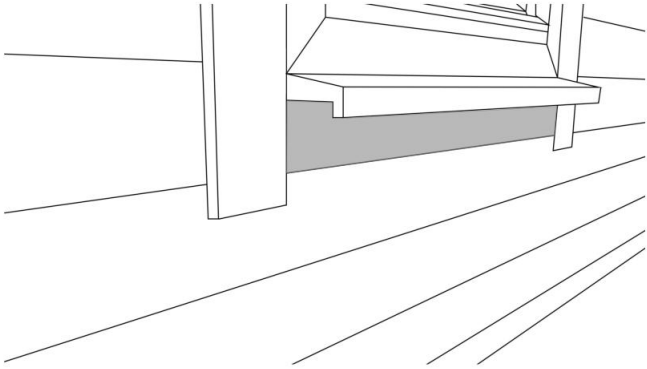

Then, the fascias on all doors and windows need screwing into the logs.

There are pre-drilled holes on all the door and window fascias, both internally and externally, which show exactly what and where needs screwing. This will secure the doors and windows to the logs.

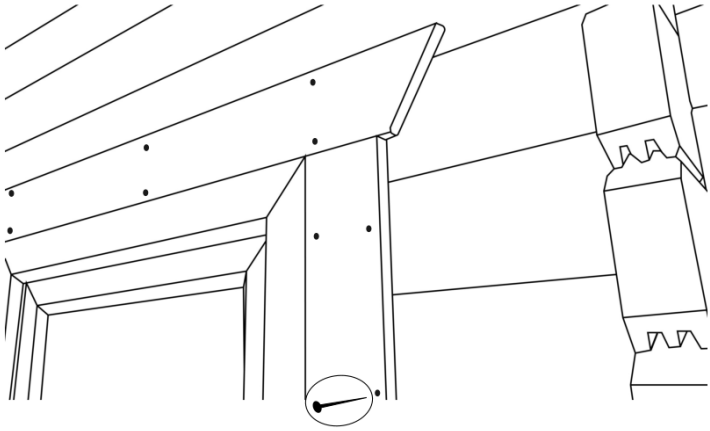

Use 35mm screws for each of the pre-drilled holes.

Your log cabin will then be complete – please ensure you read the maintenance instructions to maximise the longevity of the building.



Maintenance

uPVC door and window adjustment

Please refer to the uPVC door section of the installation instructions with regards to door and window adjustment. It is common practice that you may need to adjust hinges over time as the doors can move helped on by gravity, heat, and humidity. This QR code will take you to a video to assist with your adjustments.

Adjusting the doors and windows is the responsibility of the customer, and not Powersheds, our retail partners or any employed installation company.

Treatment

Your log cabin is untreated. It is therefore vital to treat your log cabin as soon as possible after assembly with a high-quality wood preserver, followed by a water repellent topcoat.

Your log cabin will be provided with a free 5L tin of water-based, ready-to-use, exterior wood preservative and primer as a goodwill gesture to get you started. This may not cover the full log cabin so we would recommend that you start from the bottom of the log cabin as this is the most important area to preserve.

Then, with your own preserver, please finish protecting your log cabin. We would recommend applying several coats and try get a good thick layer to the bottom few logs on each side and around all log joints in the corners.

If you want to paint over the clear preserver in a paint or wood stain to change the colour you can. Speak to the paint supplier / manufacturer for more details.

You then need to re-treat the garden building regularly (typically once a year) to ensure the logs are thoroughly protected. We would also recommend treating the inside of your log cabin as well as the outside.

Leaks

It is rare for leaks in the log cabin and if there are it is generally rectifiable.

If there are any leaks in your log cabin it is important to determine where the leaks come from. If the leak is coming through the roof, you may need to check if the EPDM is damaged. If the leak is coming through the floor, you can check to see if water is pooling around the base etc. If water appears to be coming through the windows, you

may need to check behind the window facias by unscrewing them and potentially adding silicone, and then re-attaching the fascias. If a leak is coming through the logs in the corners where the logs join, this would be if it is soaking through the notches of the cut / machined timber. This would generally occur if there is little or no treatment on the logs, which is why it is important to preserve the corners so thoroughly.

Gaps between logs

Timber is a natural product and can shrink and expand in different weather conditions. When facia boards or any internal items (e.g. shelving) is screwed into the logs, they will move with the movement of the logs. Therefore, if all the logs shrink by 1mm each, then logs screwed to other items like facia boards will move with them. This can occasionally mean you will see gaps appearing between the logs.

This is very normal with log cabins and simple to rectify. You need to unscrew all the window and door fascias from the logs (plus anything else screwed to the logs such as shelving) and then the logs will fall into position. You can then re-screw the fascias etc back into place. Please ensure you do **not** put your fingers in the gap of the logs in case the logs fall and trap your fingers.

Moisture / Ventilation

Occasionally you may find you need to add ventilation to the log cabin depending on what it is to be used for. For example, if you are planning to put in garden tools like a lawn mower which is likely to bring water into the cabin, we would recommend adding ventilation or occasionally opening windows to allow air to circulate around the cabin.

Mildew growth

Again, this is rare but is worth including in here.

Mould/mildew thrives when it finds a moisture source. If this happens in a log cabin it would typically come from some form of condensation, or a leak. If there is then a form of heat or warmth inside the shed against the cold outside, then this where the condensation often occurs. The warmth could come internally from a heater or internal light for example, or simply from it being so cold outside against the inside temperature. Mould/mildew growth could also be because of constant exposure to water content from inside the building e.g. from wet tools etc. In any case, when

moisture is allowed to seep into a porous surface such as wood (which is a natural product), mould/mildew will likely follow.

As well as removing the mould/mildew from these surfaces, it is important to determine the cause of the moisture, as well. For example, if there is a leak, fixing it quickly will be an important first step to eliminating the problem. If this happens, we would firstly recommend you remove the mould/mildew. Start by using a stiff broom or brush to remove dust, pollen and surface soil. Then you need to kill the mould/mildew. Most people do this with bleach, which is fine but of course bleach is mostly water and so you would need to ensure it dries fairly quickly over a one- or two-day period. Fungicide is an alternative to bleach. Finally, we would recommend you retreat the area (and the whole inside of the cabin) with a good quality wood preserver. If there is an issue with a leak or condensation, then preserving the inside of your cabin will help this long term.

We would then recommend that you try to find out where the issue has come from in order to prevent it from re-occurring in the future. If there are a lot of wet tools in the shed, ensure they are dried before putting them back in. If there is damage to the EPDM, this may need fixing / checking. The other important factor may be to add ventilation to allow condensation to escape.

Check your base

Although your base should be level at the time of assembly, some bases can move over time and if you find this occurs then the building can twist or the doors may not close properly. If such occurrences appear, you may need to pack up the base to keep the building level.

Adjusting storm braces

With movement in the timber, you may need to re-adjust the bottom bolt which goes into the slotted part of the storm brace (at the bottom). If you find that it is to the top or the bottom of the slot, these needs taking out and re-screwing in the centre of the slot.

Share Your Log Cabin

Here at Powersheds we love to see your log cabins!

Send us photos of your finished cabins to our social media channels using the following handles –

@PowerSheds #PowerSheds



TikTok



Instagram



Twitter



Facebook

uPVC Doors and Windows Guarantee

The manufacturers policy is one of continuous development and improvement and accordingly we reserve the right to alter specification without prior notice.

To the best of our knowledge this product was in perfect condition when it left our factory. Please ensure you examine it before installation and check quality, accuracy of the components and quantity of the contents. Failure to do so may hinder our ability to assist.

Customers should note that claims for damage to glass, finish or shortages must be submitted to the vendor before installation or booking any tradesman. The manufacturer also reserves the right to disallow claims once the product has been installed. Failure to follow the recommendations set out in these instructions or to install in a manner not approved by the manufacturer may results in all or part of the product guarantee being null or void. This product is guaranteed by the manufacturer for a period of 10 years from the date of purchase and no other proposal or statement by any other party will supersede or complement this offer. Should any part of it become defective due to faulty manufacture or materials, it will be replaced free of charge (supply only, no fitting costs will be covered). Any parts supplied will have a guarantee term for the remaining period of the initial product guarantee stated previously. The product is not guaranteed against conditions of use or misuse. The 10 year guarantee is applicable to the frame and a 1 year guarantee is applicable to all hardware/moving parts. All window and door hardware should be maintained by the customer every three months using a 3 in 1 spray oil (not WD40) to the moveable and mechanical parts. A 10 year guarantee also applies to the glass units and hardware. When measuring all aspects of quality of glass please follow the Glass and Glazing Federation guidelines.

The guarantee does not cover glass breakage however caused, or any fault arising from incorrect installation. Any replacement parts supplied, including assemblies, or completed products, are for DIY installation and no claim can be accepted for any costs however incurred for the installation of the replacement items.

This guarantee is offered as an extra benefit and is in addition to and does not affect your statutory rights. Please retain your receipt as proof of purchase.

Returns

If Powersheds is not for you and you'd like to return your log cabin within 14 days of delivery then we will collect the item from you. There may be a charge to collect the log cabin. All we ask is that you **do not unpack** the log cabin.

You need to notify the company you ordered your garden building from to arrange a cancellation or return.

If you have unpacked the cabin, then you can still return the product to us providing it has not been installed and is within 14 days of delivery, but you will have to cover the cost of returning the item and re-packing it. This will either need to be arranging the delivery yourself (to our manufacturing unit in West Yorkshire) or repacking and securing the goods and we may be able to arrange a delivery for you. The cost of this will depend on your location and the item bought – please contact us if you would like us to advise the cost of this. In this case we will not profit from any courier charges but simply pass on the cost we receive to you.

Any delivery surcharges you have paid (such as a quicker delivery) will not be refunded.

We will not accept a return for a bespoke log cabin unless it is damaged or faulty (and in that case we will offer replacement components).

Once your item has been returned it will be checked to ensure it is complete and in a re-sellable condition. If we deem that the product is not in a re-sellable condition, we shall deduct a reasonable amount to cover any costs to use or return them to you.

Where a refund is to be paid, we will usually refund any money received from you using the same method originally used by you to pay for your purchase.

Contact Us

If you have any queries or issues with your log cabin then you can:

- Check out our FAQ page on www.Powersheds.com
- Email us at hello@Powersheds.com
  Please provide photographs of any reported issues*
  Any replacement parts can take up to two weeks, but we will aim to send them out as quickly as possible.
- Contact us via the telephone – 01274 036 577 (Mon-Fri 09:00 - 16:30)
- Write to us at: Powersheds Ltd
  21 Commondale Way
  Euroway Trading Estate
  Bradford
  BD4 6SF

*On the rare occasion that something is missing, damaged or incorrect, please contact us to make us aware so we can send out any replacements.

* Please be aware we are unable to reimburse you if you purchase your own materials.

* We also cannot compensate for subsequential losses such as installation work, as all components should be checked prior to booking installers etc.

* Should you choose to proceed with your build prior to contacting us for assistance and allowing us the opportunity to investigate, we cannot authorise compensation.